using a single shift and no multipliers is shown in Fig. 1. The summation blocks shown use 2's complement arithmetic and the inputs can be configured to add or subtract. We refer to this architecture as the modified correlator (MC). For a PN code with coefficients given by vector $\mathbf{c} \in \{1, -1\}$, the DDMF coefficients are such that $\mathbf{b} \in \{0, 1, -1, 2, -2\}$. For a PN code of length N these are given by

$$\begin{aligned} b_0 &= c_0 \\ b_n &= c_n - c_{n-1} \qquad 1 \le n \le N-1 \\ b_N &= -c_{N-1} \end{aligned} \tag{1}$$

which leads to approximately half of the coefficients being equal to zero for most classes of PN code and so no arithmetic operation is required for these taps. The output of the correlator is obtained from

$$y(n) = y_d(n) + y_d(n-1) \tag{2}$$

where

$$y_d(n) = \sum_{k=0}^{N} b_k \cdot x(n-k) \tag{3}$$

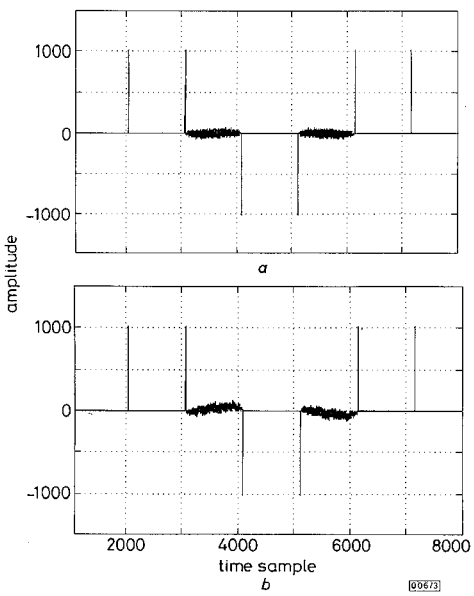

Fig. 3 *Correlation functions for 1023 chip m-sequence*

a Modified correlator
b Low complexity correlator

This output is identical to that of the CDMF even in the presence of noise and data modulation. The modified DDMF architecture can be simplified further to give a genuine complexity reduction of 50% over the conventional correlator architecture, but with a slight degradation in performance. Fig. 2 shows this low complexity correlator (LCC) which is based on the MC, but with the omission of the coefficients b_0 and b_N. This leaves only the '2' and '–2' coefficients which can be reassigned as '1' and '–1', respectively, and results in the loss of 3 add operations as well as the shift and two delay elements. Unfortunately, the restriction that $b_0 = -b_N$ must be applied and effectively reduces the PN code set by 50%, which for large code lengths is not a problem. This sub-optimal correlator has a peak correlation peak of N–1 as compared to N. The sidelobe levels are also affected. Fig. 3*a* shows the correlation output for the MC (and hence CDMF and DDMF), for an input bit sequence of 110011, and Fig. 3*b* shows the equivalent output for the LCC. To quantify this degradation, the peak to worst case sidelobe performance is illustrated in Fig. 4 where the results are obtained as an average over the *m*-sequence code set for a given code length. The degradation is not large but could not be considered as negligible.

Table 1: Comparison of complexity of conventional DMF, DDMF, MC, and LCC architectures for *m*-sequences of length $N = 2^n - 1$

	a CDMF	*b* DDMF	*c* Modified correlator (MC)	*d* Low complexity correlator (LCC)
Multiply	$2^n - 1$ [Note 1]	$2^{n-1} + 2$	0	0
Add (or subtract)	$2^n - 1$	$2^{n-1} + 2$	$2^{n-1} + 3$	2^{n-1}
Shift	0	0	1	0
Delay	$2^n - 2$	2^n	2^n	$2^n - 2$

Note 1: These multiplies are not strictly necessary for a correlator with one bit coefficients.

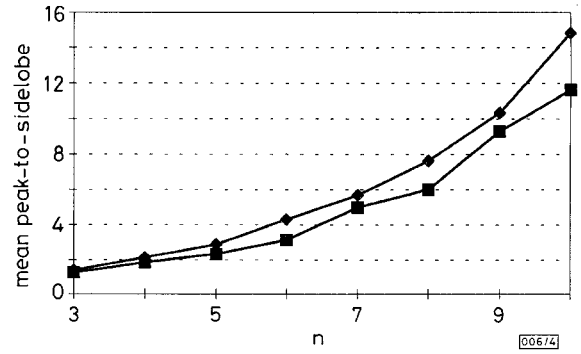

Fig. 4 *Average peak to sidelobe performance for m-sequences of length $2^n - 1$*

◆ MC
■ LCC

Summary and conclusions: The complexity of the architectures described were tested using the Altera FPGA Flex device simulator and are summarised in Table 1. All of the multiply, shift, add/subtract, and delay operations are taken into account. This shows that the complexity saving by adopting the MC architecture is considerable and the performance is identical to that of a conventional correlator or matched filter. The LCC architecture represents a further reduction in complexity, but in this case a loss in performance must also be considered.

© IEE 1997
17 April 1997
Electronics Letters Online No: 19970852

B.S.E. Tan and G.J.R. Povey (*Department of Electrical Engineering, The University of Edinburgh, King's Buildings, Mayfield Road, Edinburgh EH9 3JL, United Kingdom*)

E-mail: gjrp@ee.ed.ac.uk

References

1 POVEY, G.J.R., and GRANT, P.M.: 'Simplified matched filter receiver design for spread spectrum communication applications', *Electron. Commun. Eng. J.*, 1993, **5**, (2), pp. 59–64

2 LIN, W.-C., LIU, K.-C., and WANG, C.-K.: 'Differential matched filter architecture for spread spectrum communication systems', *Electron. Lett.*, 1996, **32**, (17), pp. 1539–1540

Signal × noise intermodulation in translinear filters

J. Mulder, M.H.L. Kouwenhoven and A.H.M. van Roermund

Indexing terms: Filters, Intermodulation

The instantaneous companding behaviour of translinear filters forces the use of large-signal equations to calculate the equivalent output noise level of these filters. By using a current-mode approach, it is shown that nonlinear noise calculations become possible for translinear filters.

Introduction: Translinear (TL) filters, first proposed by Adams [1], are receiving increasing interest, mainly due to their suitability for low-voltage low-power applications. Since TL circuits are based explicitly on the exponential behaviour of the transistor, they are instantaneously companding.

Although TL filters are characterised by an overall (large-signal) linear transfer function, they are internally nonlinear. As a

consequence, noise generated within a TL filter cannot be transformed to the output using linear or linearised equations. In this Letter, large-signal calculations are used to demonstrate that the internal nonlinearities cause signal × noise intermodulation in TL filters, resulting in a signal-dependent noise level.

Noise calculations: In translinear filters and companding circuits in general, it is important to make a distinction between the dynamic range (DR) and the signal-to-noise ratio (SNR) [2]. The dynamic range is usually defined as the ratio of the maximal and the minimal signal level which a circuit can cope with. The maximal signal level of a TL filter operating in class A is limited to the DC bias current, due to clipping distortion. In class AB filters, the signal level is limited due to soft distortion. The minimal signal level is determined by noise produced in the filter. Calculation of the noise floor is relatively simple: since no input signals are assumed to be present and the generated noise is small with respect to the bias currents, the noise sources can be transformed to the output of the filter using the linearisation of the filter in its bias point.

The SNR of a TL filter for a specific input signal can only be calculated when both the signal and the noise are regarded at the same time. Although the overall transfer function of a TL filter is linear, TL filters are internally nonlinear. As a consequence, the transfer functions of the noise sources within a TL filter to the output are nonlinear and signal dependent. Furthermore, in general, the power spectral densities of the noise sources will also be signal dependent. Therefore, to calculate the SNR, a linearised set of equations must not be used; instead, large-signal transfer functions have to be applied.

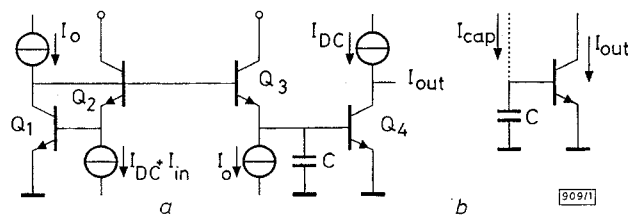

Fig. 1 *Translinear first-order lowpass filter and generic substructure*

a Filter
b Generic substructure

As an example, we will calculate the noise behaviour of the TL first order lowpass filter shown in Fig. 1*a*. The filter is biased in class A by a DC current I_{DC}. The cutoff frequency can be tuned by the current I_o. Basically, the filter consists of a four-transistor TL loop Q_1–Q_4, and a capacitance C. The operation of the filter can be explained by the 'dynamic translinear principle', which relates the time derivative of a current to a product of currents. The generic substructure shown in Fig. 1*b*, illustrates the relationship between the derivative $\dot{I}_{out}$ of the collector current, where the dot represents differentiation with respect to time, and the capacitance current I_{cap}, which is given by

$$CU_T\dot{I}_{out} = I_{out}I_{cap} \qquad (1)$$

where U_T is the thermal voltage. Thus, a linear derivative $\dot{I}_{out}$ is obtained by multiplying I_{out} and I_{cap}, which is performed by transistors Q_3 and Q_4 [3].

The noise produced in the TL filter originates from base resistance thermal noise and the collector and base current shot noise sources of the bipolar transistors. Base current shot noise is negligible in TL circuits [4]. The thermal noise sources are signal-independent and are connected in series. Therefore, they can be replaced by one equivalent noise voltage source in series with the base of Q_1. Since Q_1 carries a DC current, this noise voltage source can be transformed to an equivalent noise current source in parallel with the collector shot noise of Q_1. Thus, three collector current shot noise sources i_1–i_3 remain, which must be transformed to the output of the filter. Note that i_4 is already situated at the output.

Conventional, i.e. static, TL circuits are elegantly described in terms of currents [4]; the same applies to dynamic TL circuits [3]. Using ideal transistor models, but including the noise sources i_1–i_3, the filter shown in Fig. 1*a* can be described by the TL loop equation:

$$(I_o+i_1)(I_{DC}+I_{in}+i_2) = (I_o+I_{cap}+i_3)(I_{DC}+I_{out}) \quad (2)$$

Eqn. 1 can be used to eliminate I_{cap}, which results in a differential equation. In the elaboration of eqn. 2, cross-products of noise sources can be neglected. Applying a first-order Taylor approximation to the factor $(I_o + i_3)$, the resulting equation is given by:

$$\frac{CU_T}{I_o+i_3}\dot{I}_{out} + I_{out} = I_{in} + i_2 + \frac{I_{DC}+I_{in}}{I_o}(i_1 - i_3) \quad (3)$$

The meaning of eqn. 3 is illustrated in the block schematic diagram shown in Fig. 2. Eqn. 3 describes an integrator with unity negative feedback. The unity gain frequency of the integrator is modulated by i_3, as shown in Fig. 2. Since the effect of the noise bandwidth of the filter is negligible, it can be disregarded. Fig. 2 also shows that the equivalent input signal in the presence of noise, which we will denote by I'_{in}, is the right-hand side of eqn. 3. Note that i_2 is simply added to I_{in}. This can be explained intuitively by the fact that i_2 is situated directly at the input of the filter. The most interesting term in I'_{in} is the product $I_{in}(i_1-i_3)$. This term expresses the intermodulation of signal and noise, i.e. the aliasing of noise.

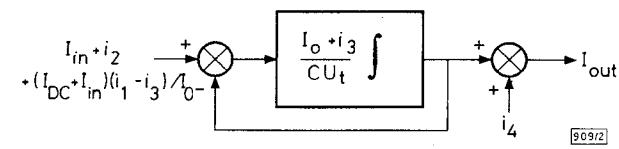

Fig. 2 *Block schematic representation of translinear filter including noise*

Since I'_{in} is directly at the input of the filter, the power spectral density $S_{I'_{in}}(\omega)$ of I'_{in} can be transformed to the output using the (large-signal) linear transfer function of the filter $H(j\omega)$. Consequently, we have to calculate $S_{I'_{in}}(\omega)$.

From noise theory, it is known that signals in a nonlinear system can be separated into four components [5]: $I'_{in}(t) = C(t) + S(t) + N(t) + I(t)$. $C(t)$ represents the DC component of the signal, which is zero for I'_{in}, $S(t) = I_{in}$ represents the signal × signal component, $N(t) = i_2 + (i_1-i_3)I_{DC}/I_o$ represents the noise × noise component and $I(t) = I_{in}(i_1-i_3)/I_o$ represents the signal × noise intermodulation component. $S_{I'_{in}}(\omega)$ equals the sum of the spectra of $S(t)$, $N(t)$ and $I(t)$.

The power spectra of the shot noise sources i_1–i_4 are determined by the large-signal currents flowing through Q_1–Q_4. At this stage, the remaining calculations are linear. Therefore, the power spectra can be replaced by their time averages [6], which are determined by I_o, I_{DC}, I_o and I_{DC}, respectively, because the filter operates in class A . Thus, the double-sided spectral density functions $S_S(\omega)$, $S_N(\omega)$ and $S_I(\omega)$ can be calculated using elementary signal processing theory. This yields

$$S_S(\omega) = S_{I_{in}}(\omega) \qquad (4)$$

$$S_N(\omega) = qI_{DC}(1 + 2I_{DC}/I_o) \qquad (5)$$

$$S_I(\omega) = \frac{q}{\pi I_o}\int_{-\infty}^{\infty} S_{I_{in}}(y)dy \qquad (6)$$

The expression for $S_I(\omega)$ shows that the intermodulation noise power is proportional to the total power of the input signal. Consequently, as the input power increases, the total noise power also increases. This is a well-known phenomenon in companding systems [2]. Already, this effect has been observed experimentally for a TL filter [7]. It is important to note that the input signal does not have to be in the passband to increase the noise level. Consequently, a large out-of-band signal will deteriorate the SNR of a small in-band signal at the output of the filter. To calculate the SNR at the output of the filter, the power spectra must be multiplied by $|H(j\omega)|^2$.

To quantify these results, let the parameters in the TL lowpass filter be given by: $I_o = 1\mu A$, $C = 10pF$ and $U_T = 26mV$, resulting in a cutoff frequency of 612kHz, $I_{DC} = 1\mu A$, and I_{in} is a sine function with amplitude I_a. The noise bandwidth of the filter, given by $I_o/(4CU_T)$ Hz, is also applied to i_4. At these current levels, the influence of the base resistance is negligible. When no signal is applied, the equivalent output noise level is $1.13pA/\sqrt{Hz}$. When a maximal signal is applied, i.e. $I_a = 1\mu A$, the noise level increases with 1.8dB to $1.39pA/\sqrt{Hz}$. Thus, the DR of the filter equals 56.1dB, while the maximal SNR equals 54.3dB. In class AB TL filters, the effect of signal × noise intermodulation on the SNR will be stronger, as shown experimentally in [7].

Conclusions: Owing to the internal nonlinear behaviour of translinear filters, large-signal calculations have to be used to transform the noise sources within a TL filter to the output. By using a current-mode approach, these nonlinear noise calculations were shown to become possible for TL filters. As an example, the equivalent output noise of a first-order low-pass TL filter was calculated. The calculations clearly demonstrate the occurrence of signal × noise intermodulation.

© IEE 1997
9 April 1997
Electronics Letters Online No: 19970811

J. Mulder, M.H.L. Kouwenhoven and A.H.M. van Roermund (*Electronics Research Laboratory, Delft University of Technology, Mekelweg 4, 2628 CD Delft, The Netherlands*)

E-mail: j.mulder@et.tudelft.nl

References

1 ADAMS, R.W.: 'Filtering in the log domain'. 63rd Conv. A.E.S., LA, 1979, (preprint 1470)
2 TSIVIDIS, Y.: 'Externally linear, time-invariant systems and their application to companding signal processors', *IEEE Trans. CAS II*, 1997, **44**, (2), pp. 65–85
3 MULDER, J., V.D. WOERD, A.C., SERDIJN, W.A., and V. ROERMUND, A.H.M.: 'General currentmode analysis method of translinear filters', *IEEE Trans. CAS I*, 1997, **44**, (3), pp. 193–197
4 SEEVINCK, E.: 'Analysis and synthesis of translinear integrated circuits' (Elsevier, Amsterdam, 1988)
5 BLACHINAN, N.M.: 'The signal × signal, noise × noise, and signal × noise output of a nonlinearity', *IEEE Trans. Inf. Theory*, 1968, **14**, (1), pp. 21–27
6 LAMPARD, D.G.: 'Generalisation of the Wiener-Khintchine theorem to nonstationary processes', *Appl. Physics*, 1954, **25**, (6), pp. 802–803
7 PUNZENBERGER, M., and ENZ, C.: 'A 1.2V BiCMOS class AB log-domain filter'. Proc. ISSCC, 1997, pp. 65–66

Universal active current filter with three inputs and one output using plus-type CCIIs

Chun-Ming Chang

Indexing terms: Circuit theory, Active filters, Current conveyors

A universal active current filter with three inputs and one output employing only plus-type second-generation current conveyers (CCII+s) is presented. The circuit offers the following advantageous features: orthogonal control of ω_o and Q with one grounded resistor and one virtual grounded resistor, use of grounded capacitors ideal for integration, no requirement of cancellation constraints in realising the lowpass, bandpass, highpass and notch filter responses, low passive sensitivities, high output impedance and simpler configuration due to the use of only plus-type CCIIs.

Introduction: The applications and advantages in the realisation of various active filter transfer functions using current conveyors have received considerable attention [1]. Roberts and Sedro proposed that the circuits based on current amplifiers will operate at higher signal bandwidths with greater linearity and will have a larger dynamic range than their voltoge-based circuit counterparts [2]. Hence, some current-mode biquads using the current conveyor were proposed [3–9]. In 1991, the author proposed a universal active current filter with three inputs and one output based on plus-type and minus-type second-generation current conveyors (CCII+s and CCII–s) [4]. Since the implementation configuration of the plus-type CCII is simpler than that of the minus-type CCII, in this Letter, the author proposes a novel universal active current filter with three inputs and one output, based on only plus-type CCIIs. The old filter employs three CCII+s, two CCII–s, two grounded capacitors and six grounded resistors, whereas the new type employs five CCII+s, two grounded capacitors and four grounded/virtual grounded resistors; it orthogonally controls ω_o and Q with separate grounded resistors, employs only grounded capacitors which are ideal for IC implementation, requires no critical matching conditions in realising the lowpass, bandpass, highpass and notch filter responses, has low sensitivities to passive components and offers a high output impedance.

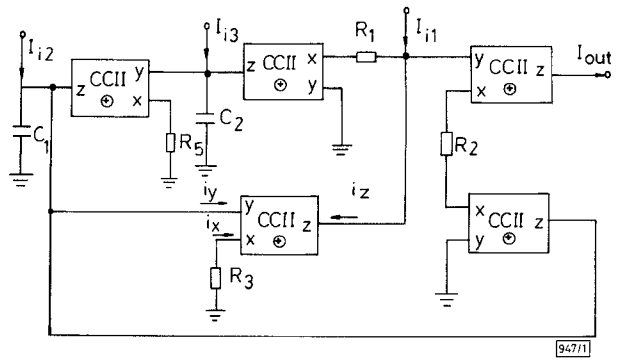

Fig. 1 *Proposed universal active current filter*

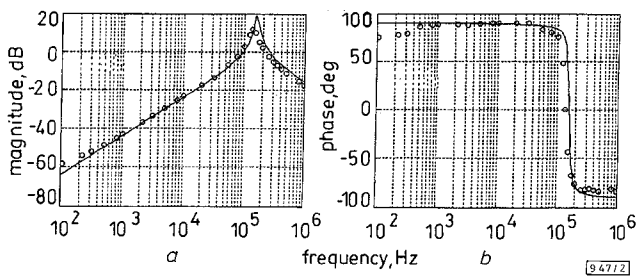

Fig. 2 *Amplitude-frequency response and phase-frequency response of proposed bandpass filters*

——— theoretical
○ experimental
a Amplitude-frequency response
b Phase-frequency response

Circuit description: The proposed network, based on and employing the plus-type second-generation current conveyor (CCII+), is shown in Fig. 1. Using standard notation, the port relations of a CCII+ can be characterised by [3]

$$\begin{bmatrix} i_y \\ v_x \\ i_z \end{bmatrix} = \begin{bmatrix} 0 & 0 & 0 \\ 1 & 0 & 0 \\ 0 & 1 & 0 \end{bmatrix} \begin{bmatrix} v_y \\ i_x \\ v_z \end{bmatrix} \quad (1)$$

Two grounded capacitors are employed in the design. The use of grounded capacitors is particularly attractive for integrated circuit implementation [10].

Circuit analysis yields the following output current:

$$I_{out} = \frac{(s^2C_1C_2G_2)I_{i1} + (sC_2G_2G_3)I_{i2} + (G_2G_3G_5)I_{i3}}{s^2C_1C_2G_1 + sC_2G_2G_3 + G_1G_3G_5} \quad (2)$$

Specialisations of the numerator in eqn. 2 result in the following filter functions:

(i) highpass: $I_{i2} = I_{i3} = 0$; input current signal is I_{i1}
(ii) bandpass: $I_{i1} = I_{i3} = 0$; input current signal is I_{i2}
(iii) lowpass: $I_{i1} = I_{i2} = 0$; input current signal is I_{i3}
(iv) notch: $I_{i2} = 0$ and $I_{i1} = I_{i3}$ = input current signal
(v) allpass: $R_1 = R_2$ and $I_{i1} = -I_{i2} = I_{i3}$ = input current signal

The resonance angular frequency ω_o and quality factor Q are given by

$$\omega_o = (G_3G_5/C_1C_2)^{1/2} \quad (3)$$

$$Q = (G_1/G_2)(C_1G_5/C_2G_3)^{1/2} \quad (4)$$

Note that ω_o and Q are adjustable by grounded resistor R_3 or R_5 and by virtual grounded resistor R_1 or R_2, in that order. The configuration of grounded resistors is desirable if each filter parameter is to be made independently adjustable [11] and there is no difficulty in replacing the virtual grounded resistor by FET-based voltage-controlled resistance [12].